# Product Specification

## ● Specification

| Type | | | | AE4000-SW | AE5000-SW | AE6300-SW |
|---|---|---|---|---|---|---|
| Frame size (A) | | | | 4000 | 5000 | 6300 |
| Rated insulation voltage (Ui) (50/60Hz)(AC.V) | | | | 1000 | | |
| Rated operational voltage (Ue) (50/60Hz)(AC.V) | | | | 690 | | |
| Rated impulse withstand voltage (Uimp) (kV) | | | | 12 | | |
| Utilization category | | | | B | | |
| Pollution degree | | | | 3 | | |
| EMC environment condition (environment A or B) (Note 14) | | | | A | | |
| Number of poles | | | | 3, 4 (HN, FN) (Note 7) | | |
| Rated current In (CT rating) (A) | | | | 4000 | 5000 | 6300 |
| Current setting Ir (A) (40˚C) | WS WB General use (Current rating adjustable 0.5 to 1.0 × In 0.05 step) | | | 2000-2200-2400-2600-2800-3000-3200-3400-3600-3800-4000 | 2500-2750-3000-3250-3500-3750-4000-4250-4500-4750-5000 | 3150-3465-3780-4095-4410-4725-5040-5355-5670-5985-6300 |
| | WM Generator protection use (Current rating fixed) (Note 10) | | | 2500 ≤ Ir ≤ 4000 | 3150 ≤ Ir ≤ 5000 | 4000 ≤ Ir ≤ 6300 |
| Rated current of neutral pole (A) | | | | 2000 (4000) (Note 8) | 2500 (5000) (Note 8) | 3150 (6300) (Note 8) |
| IEC60947-2 EN60947-2 JIS C 8201-2-1 | Ultimate breaking capacity Icu (kA rms) | | 690V AC | 85 | | |
| | | | 600V AC | 85 | | |
| | | | 240-500V AC | 130 (Note 9) | | |
| | | with MCR | 690V AC | 85 | | |
| | | | 600V AC | 85 | | |
| | | | 240-500V AC | 100 | | |
| | | Bare + External relay | 690V AC | 65 (Note 1) | | |
| | | | 500V AC | 65 (Note 1) | | |
| | Rated service breaking capacity Ics (kA rms) %Icu | | | 100% | | |
| | Rated making capacity Icm (kA peak) | | 690V AC | 187 | | |
| | | | 600V AC | 187 | | |
| | | | 240-500V AC | 286 | | |
| | | with MCR | 690V AC | 187 | | |
| | | | 600V AC | 187 | | |
| | | | 240-500V AC | 220 | | |
| | | Bare or Bare + External relay | 690V AC | 143 | | |
| | | | 500V AC | 143 | | |
| Rated short time withstand current Icw (kA rms) | | | 1s | 100 (Note 13) | | |
| | | | 2s | 85 | | |
| | | | 3s | 85 | | |
| Maximum total breaking time (ms) | | | | 50 (Note 6) | | |
| Maximum closing time (ms) | | | | 80 | | |
| Number of operating cycles (Note 2) (Note 15) | With rated current | | 690V AC In (Note 16) | 1,000 | | |
| | | | 690V AC In (Note 17) | - | | |
| | Without rated current (Note 17) | | | 10,000 (3P) / 5,000 (4P) | | |
| Connecting terminal (Note 11) | Horizontal terminal | | | - | | |
| | Vertical terminal | | | ○ (Note 3) | | |
| | Front terminal | | | - | | |
| Outline dimension (mm) H×W×D | Fixed type | | 3-pole | 414×874×290 | | |
| | | | 4-pole | 414×1004(1134)×290 (Note 8) | | |
| | Drawout type | | 3-pole | 480×889×375 | | |
| | | | 4-pole | 480×1019(1149)×375 (Note 8) | | |
| Weight (kg) (without Accessory) (Note 12) | Fixed type | | 3-pole | 141 | 141 | 148 |
| | | | 4-pole | 159 (179) | 159 (179) | 166 (188) |
| | Drawout type (including cradle) | | 3-pole | 194 | 194 | 208 |
| | | | 4-pole | 223 (247) | 223 (247) | 238 (269) |
| | Cradle only | | 3-pole | 98 | 98 | 107 |
| | | | 4-pole | 113 (127) | 113 (127) | 121 (138) |
| Marking:CE/UKCA | | | | Self-declaration | | |
| CCC recognition (☆:Certified) | | | | ☆ | | |
| Marine approval (☆:Certified) | | | | ☆ (NK, LR, DNV(DNV GL), BV, ABS) | | |
| Automatic tripping device | | | | Electronic (effective value detection) | | |

# Connections

## Over view (AE630~1600-SW, AE2000~3200-SW)

| Connections / Type | Horizontal | Vertical (VT) | Front (FT) | Vertical terminal adapter (VTA) | Front terminal adapter (FTA) |
|---|---|---|---|---|---|
| Fixed type (FIX) | | —— | —— | FIX-VTA | FIX-FTA |
| Drawout type (DR) | | DR-VT | DR-FT | DR-VTA | 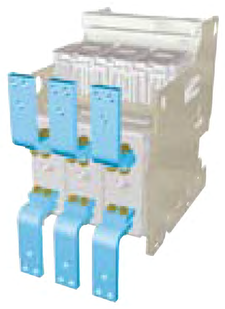 DR-FTA |

● Connection image : AE630~1600-SW, 3-pole type

## Over view (AE2000-SWA, AE4000-SWA, AE4000~6300-SW)

| Connections / Type | Vertical (VT) Standard |
|---|---|
| Fixed type (FIX) | FIX-VT |
| Drawout type (DR) | DR-VT |

● Connection image : AE2000-SWA, 3-pole type
● For AE2000-SWA, AE4000-SWA, AE4000-SW, AE5000-SW and AE6300-SW models, vertical terminal only is available.

## Available connections

| Connections / Breakers | | AE4000-SW | AE5000-SW | AE6300-SW |
|---|---|---|---|---|
| Fixed type (FIX) | Horizontal | – | – | – |
| | FIX-VT | ○ | ○ | ○ |
| | FIX-VTA | – | – | – |
| | FIX-FTA | – | – | – |
| Drawout type (DR) | Horizontal | – | – | – |
| | DR-VT | ○ | ○ | ○ |
| | DR-FT | – | – | – |
| | DR-VTA | – | – | – |
| | DR-FTA | – | – | – |

# Appearance and Product structure

## Fixed type

### AE-SW Series

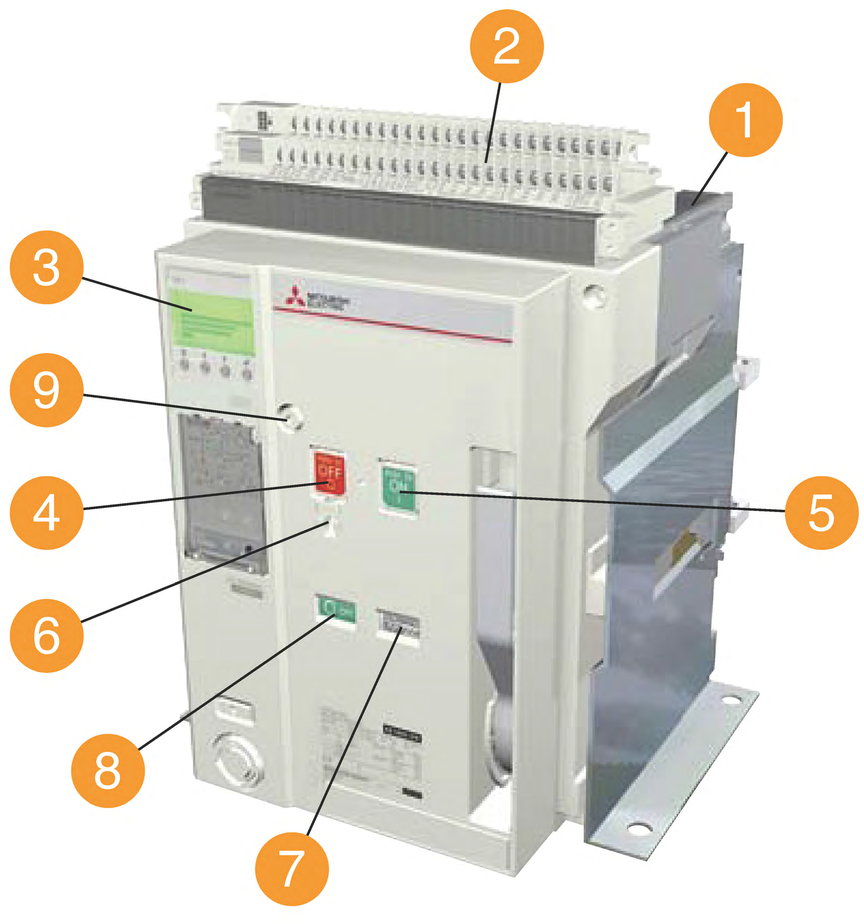


AE1600-SW 3P

1. Arc extinguishing chamber
2. Control circuit terminal block
3. Electronic trip relay
4. OFF button
5. ON button
6. Padlock hook (allows a padlock to be attached to the OFF button)
7. Charging indicator
8. ON/OFF indicator
9. Manual reset button(Optional)

For the fixed type, Lifting hooks (HP) are attached.

## Drawout type

### AE-SW Series

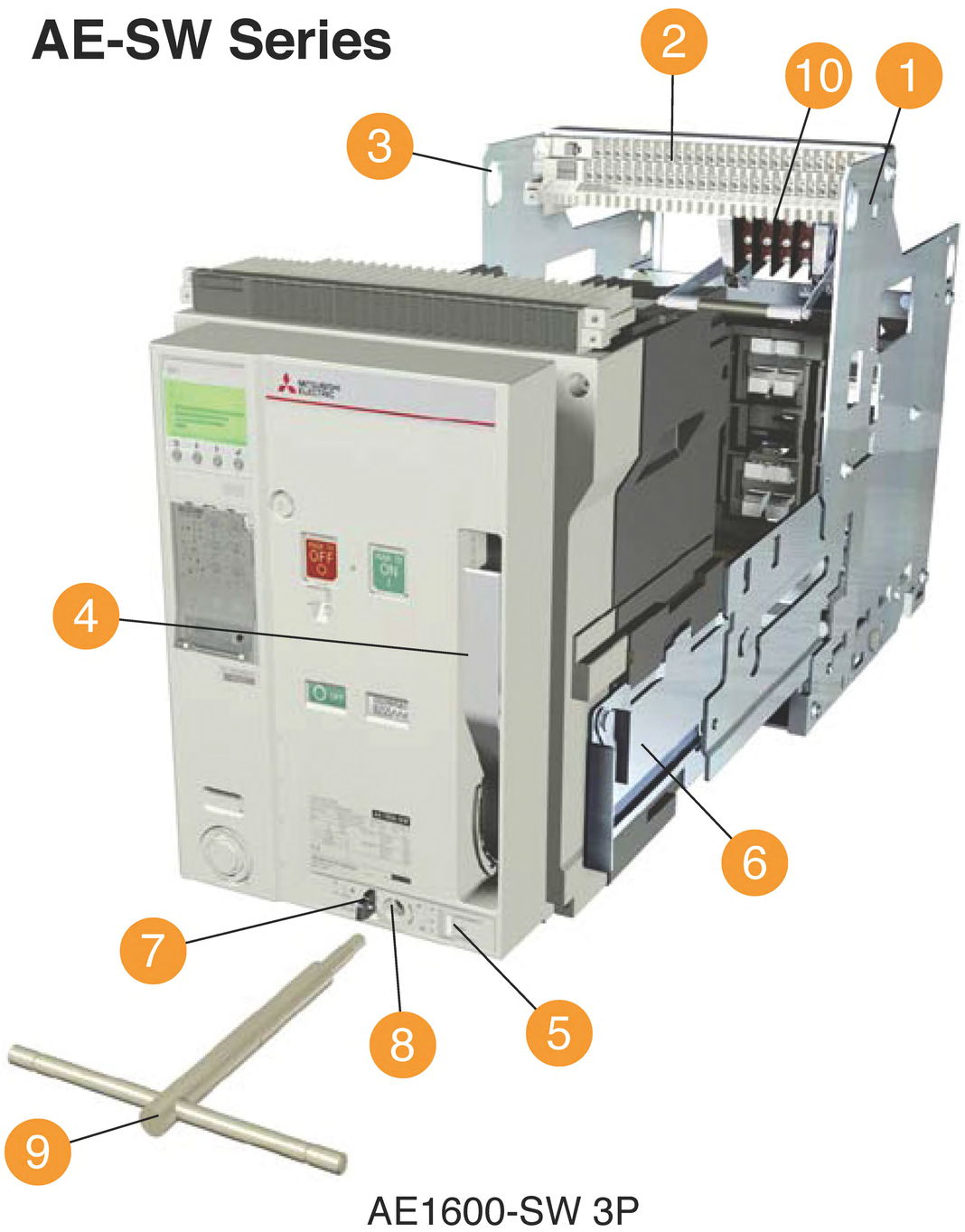


AE1600-SW 3P

1. Cradle
2. Control circuit terminal block
3. Lifting hole
4. Charging handle
5. Drawout position indicator
6. Extension rail
7. Lock plate
8. Aperture for the drawout handle
9. Drawout handle
10. Cell switch (Optional)

For the drawout type, Drawout handle is attached.

# Outline dimensions

## Fixed type AE4000-SW, AE5000-SW, AE6300-SW

(mm)

### Front view

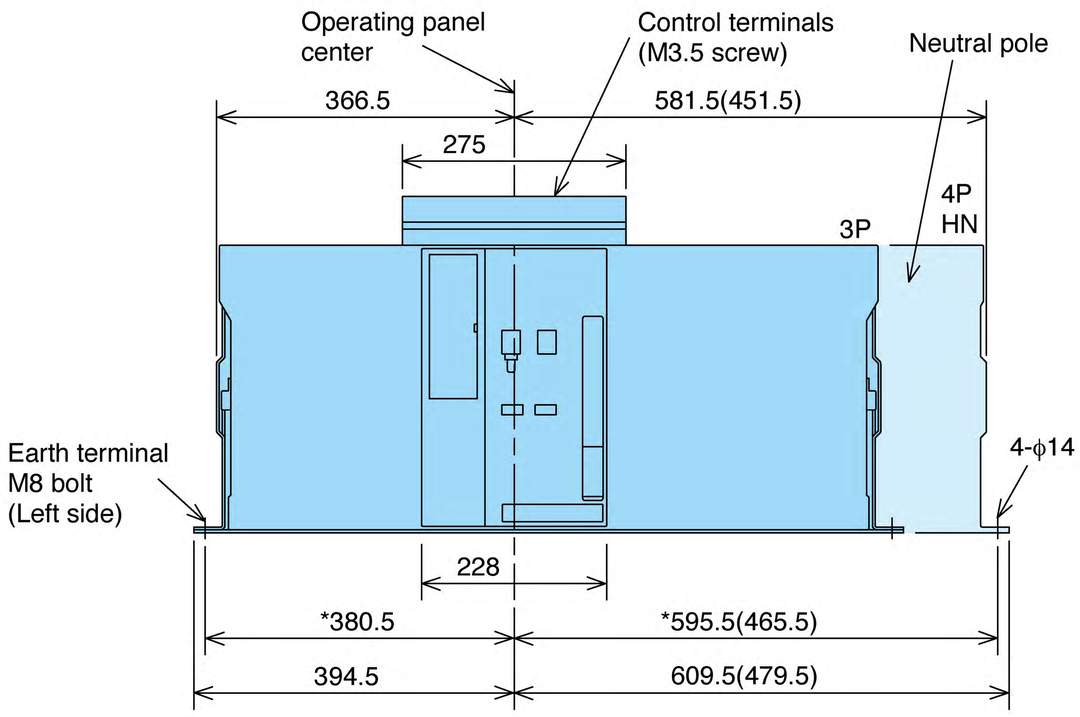


* : Mounting pitch
The numerals shown in parentheses are for 3 poles.

### Side view

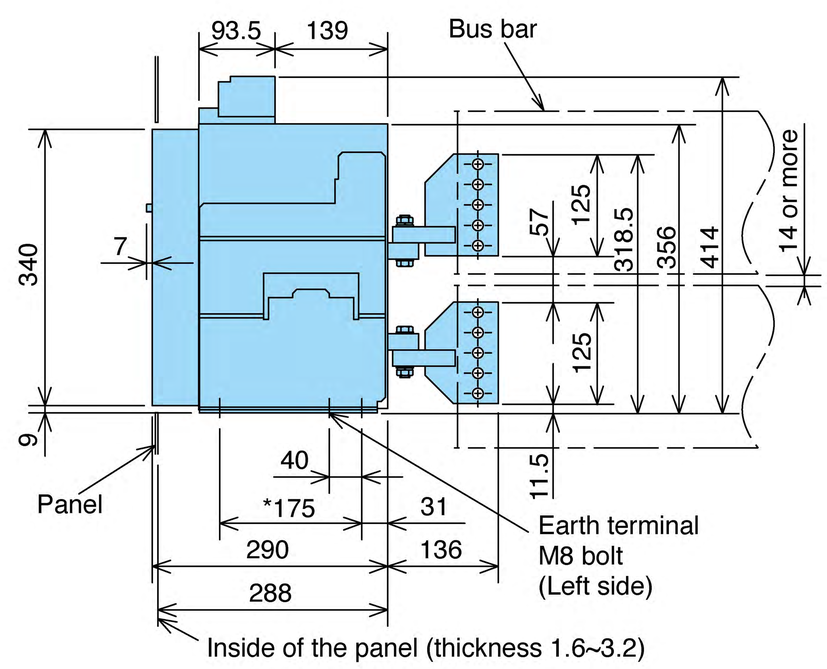


### Rear view

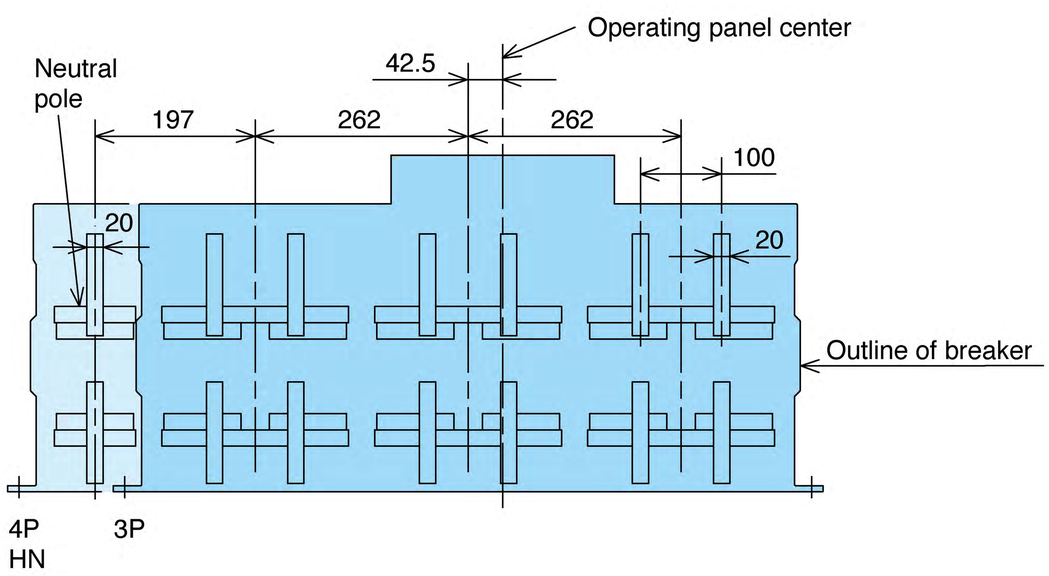


### Main circuit terminal dimension

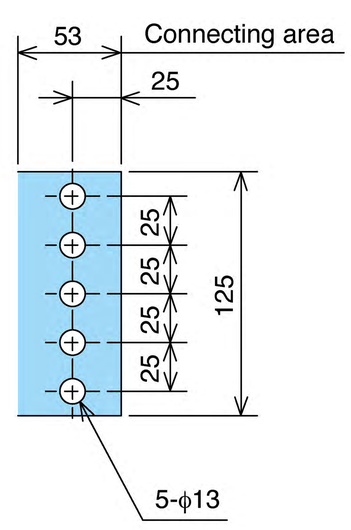


### Lifting hooks (HP)

HP is supplied with ACB Fixed type.

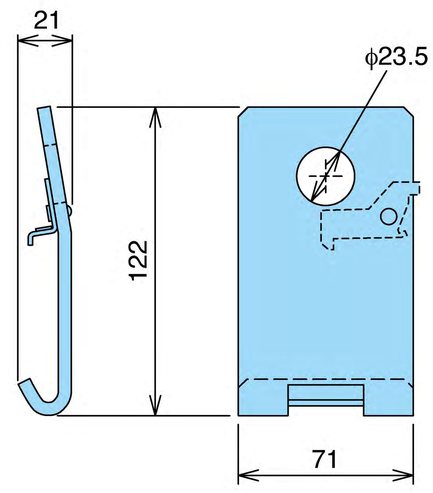


## 4P FN type

### Front view

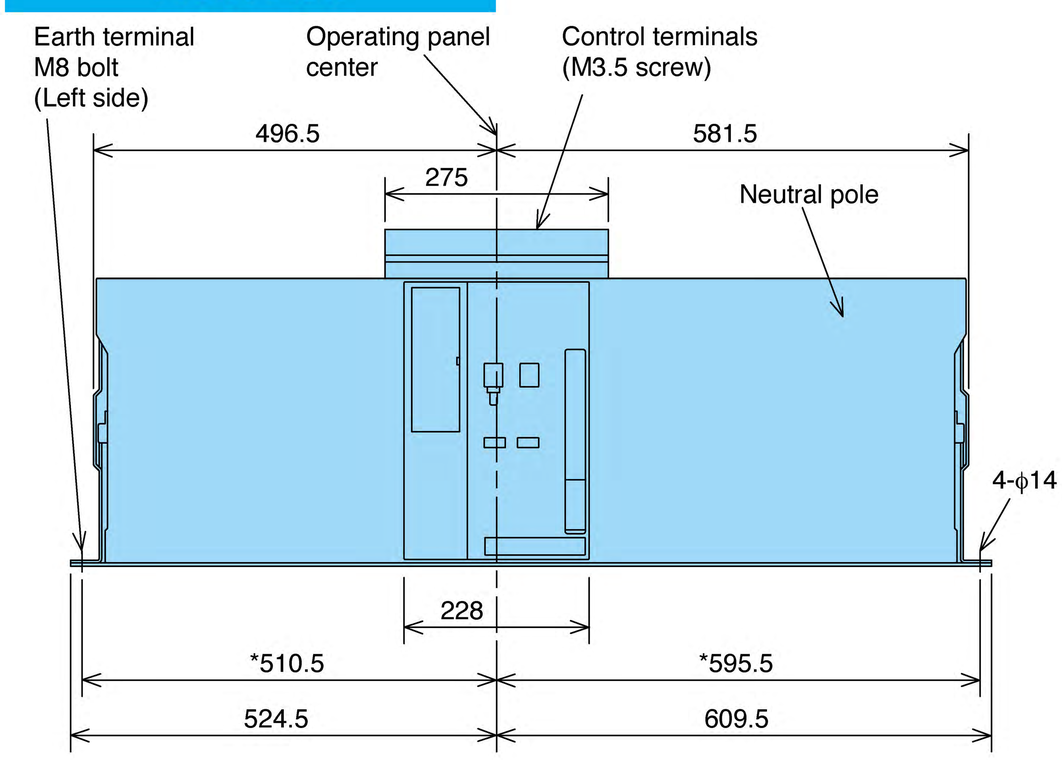


### Rear view

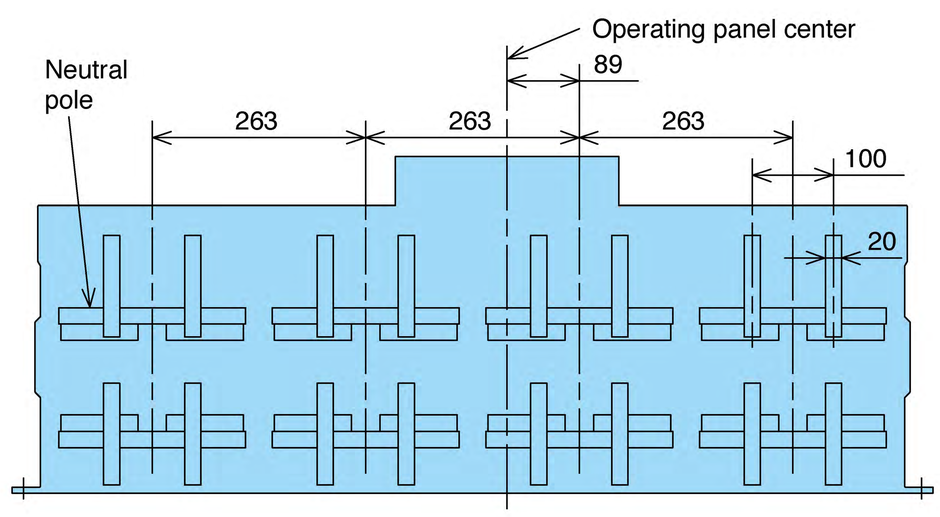


Side view dimensions are the same as 3 pole.

# Outline dimensions

## Drawout type AE4000-SW, AE5000-SW, AE6300-SW

(mm)

### Front view

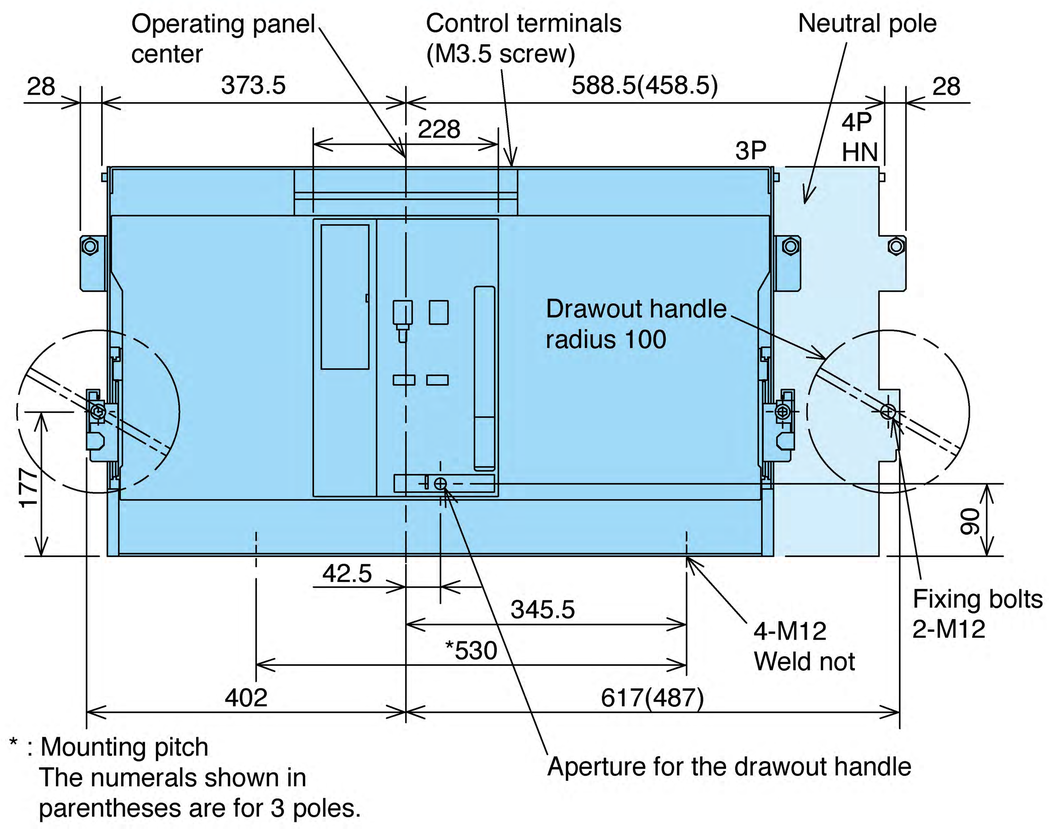


* : Mounting pitch
The numerals shown in parentheses are for 3 poles.

### Side view

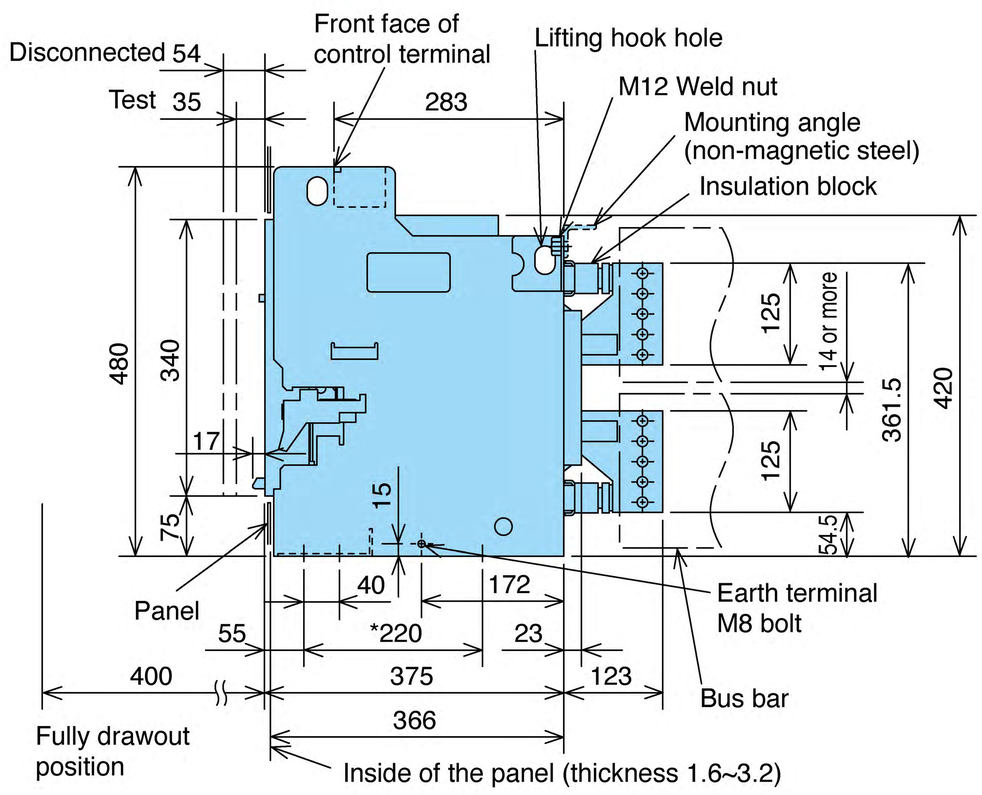


### Rear view

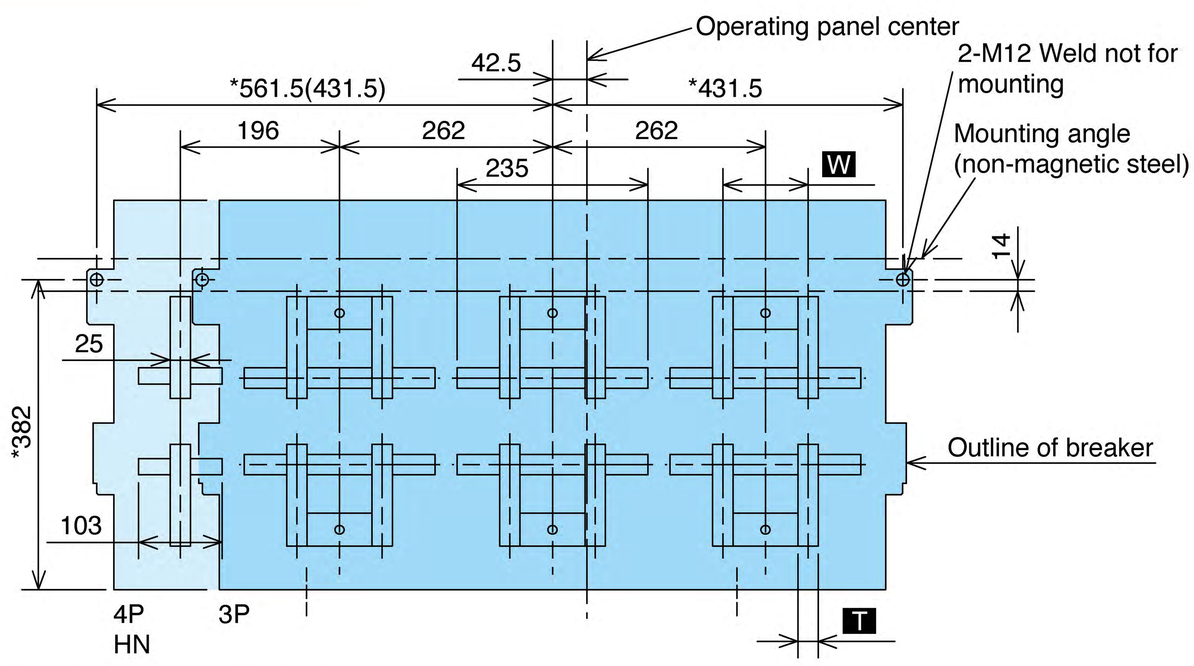


The mounting angle should be prepared by the customer.

### Main circuit terminal dimension

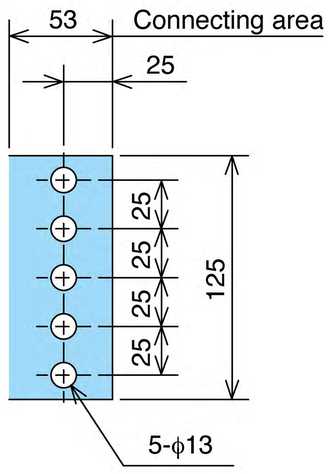


Dimensions (mm)

| Type | W | T |
|---|---|---|
| AE4000-SW AE5000-SW | 100 | 20 |
| AE6300-SW | 105 | 25 |

## 4P FN type

### Front view

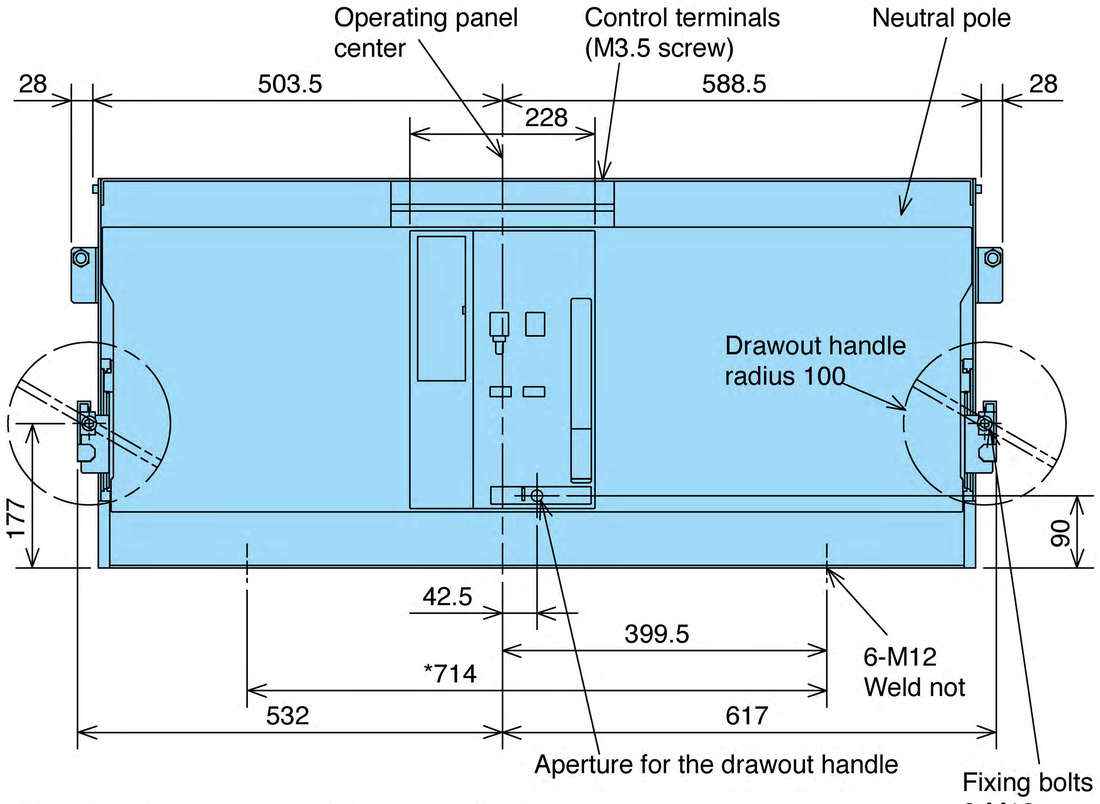


Side view dimensions are the same as 3 pole.

### Rear view

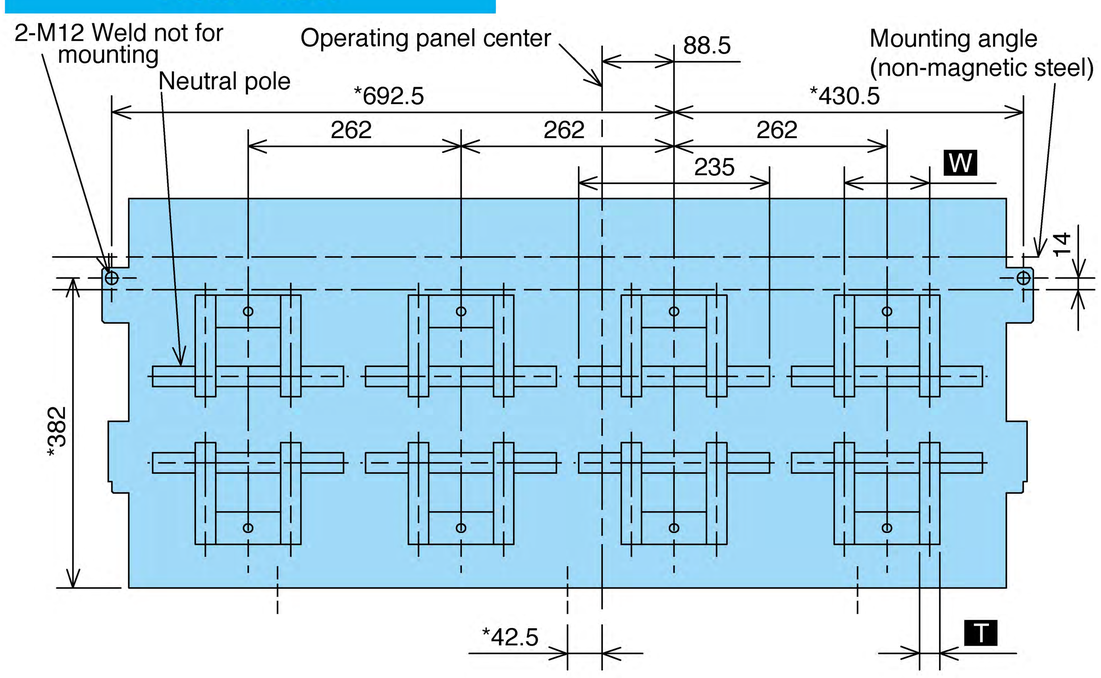

# ■Operating characteristic curve (for general use : WS)

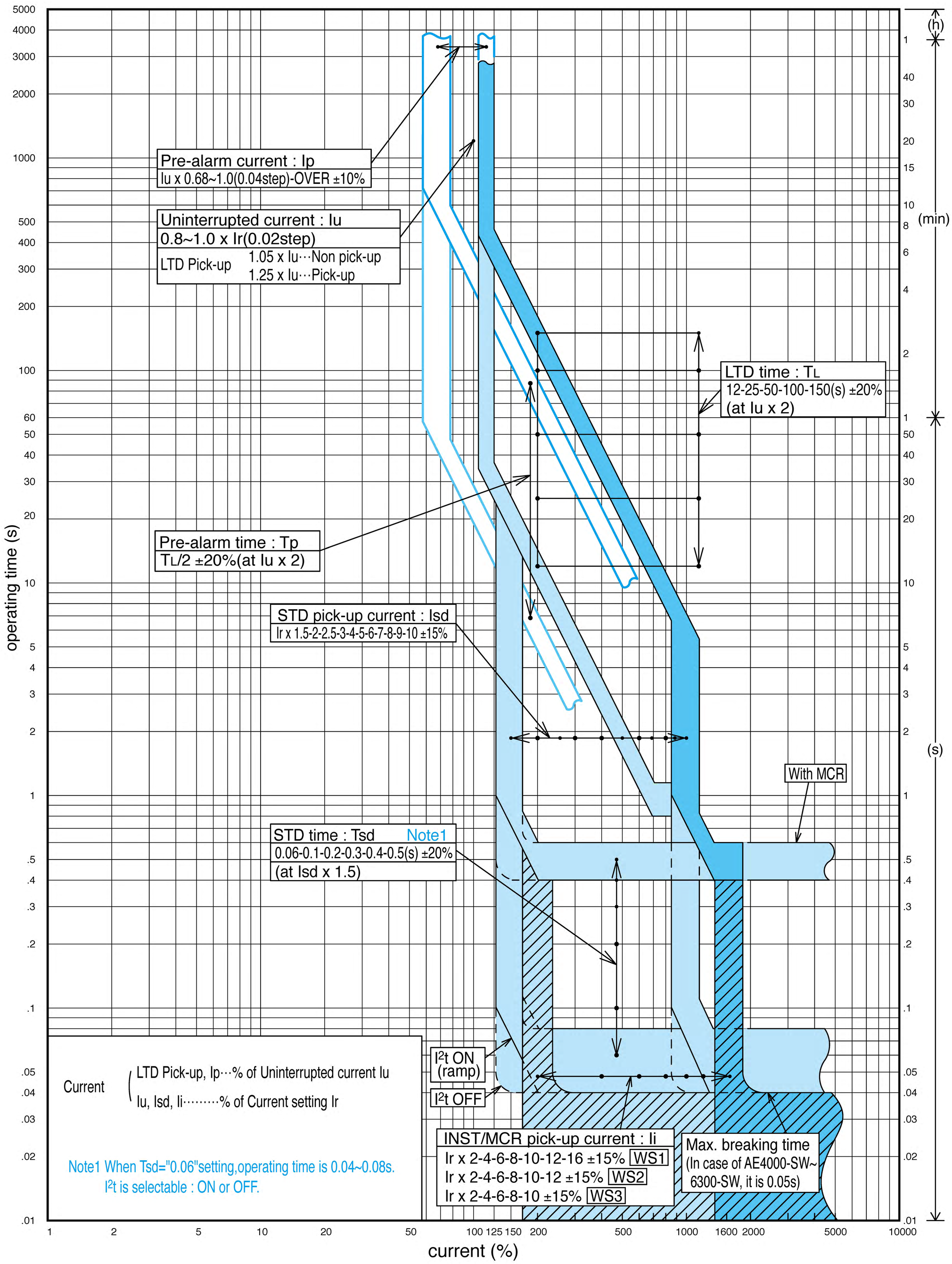

# ■Operating characteristic curve (for generator protection use : WM)

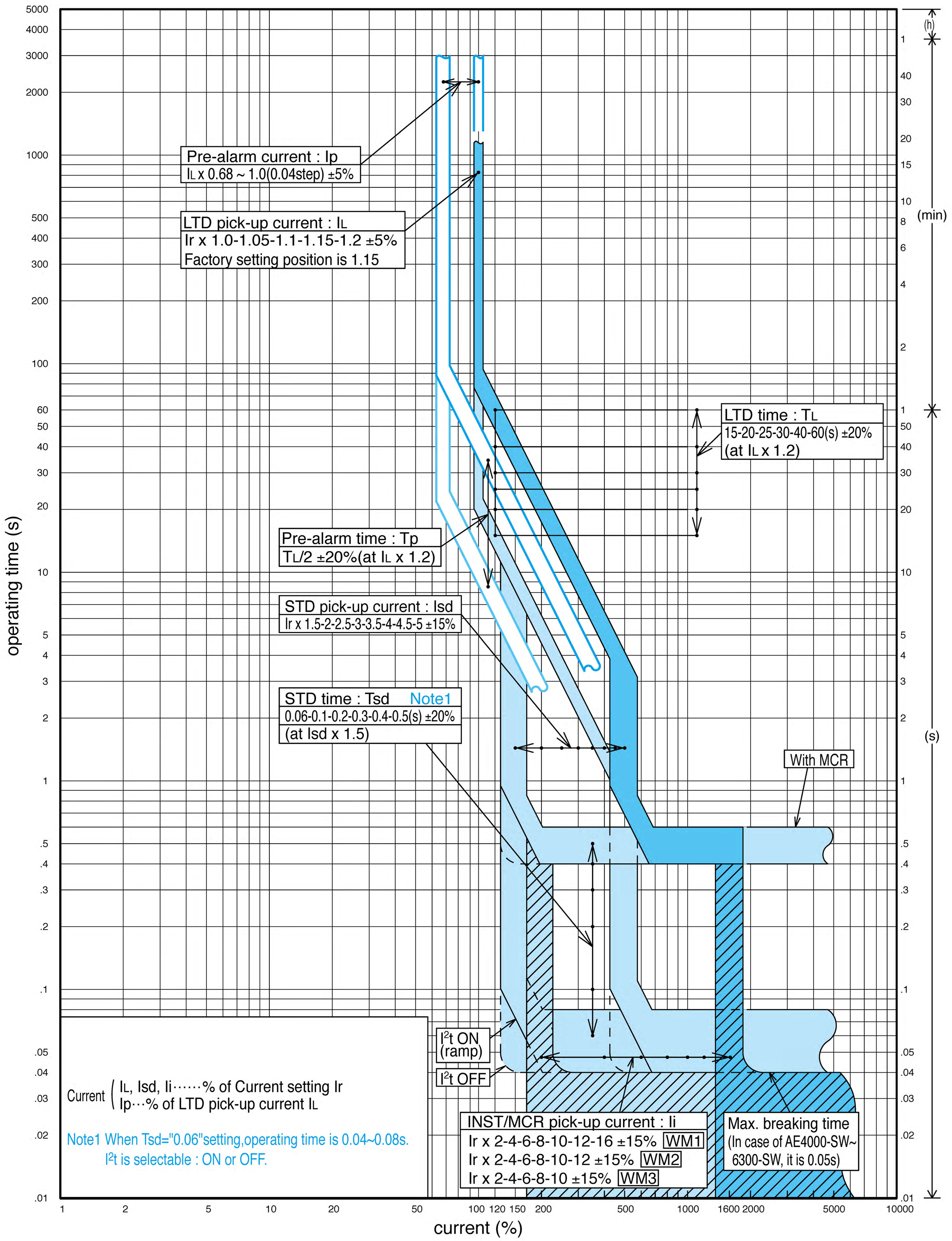

# ■Operating characteristic curve (for special use : WB)

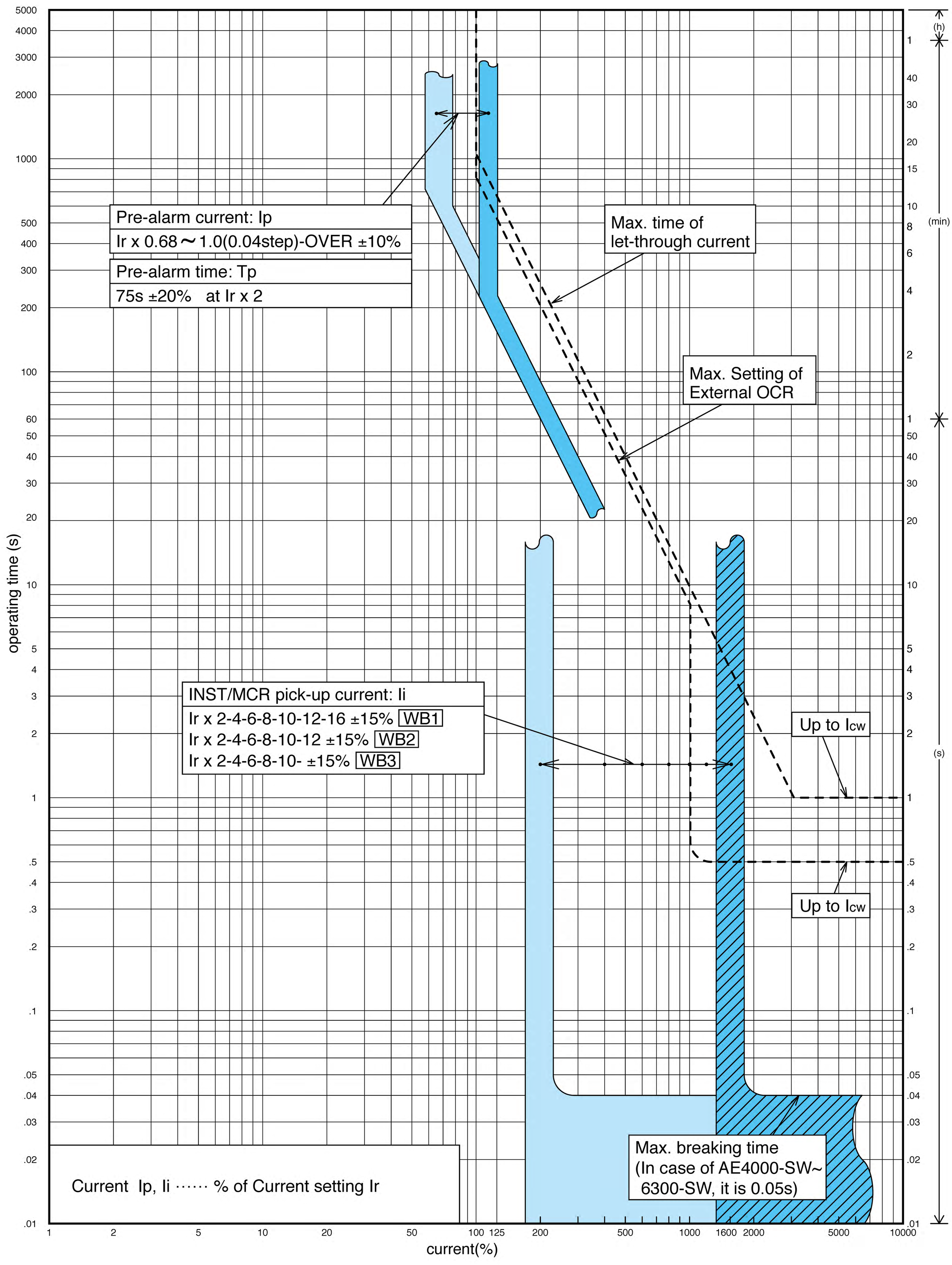

## ■Operating characteristic curve (for protective coordination use : WF)

[LTD curve setting "a=0.02"]

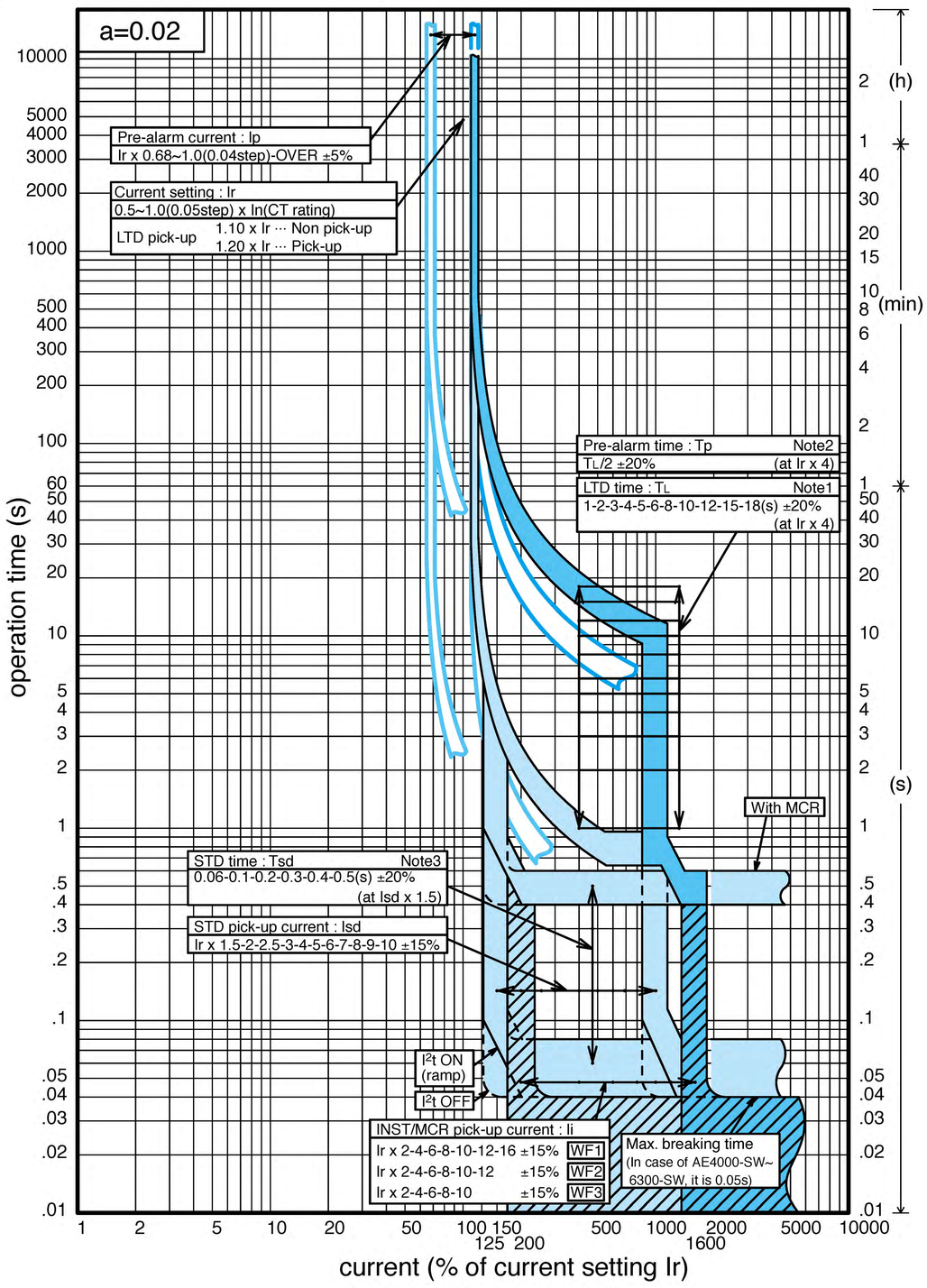


[LTD curve setting "a=1"]

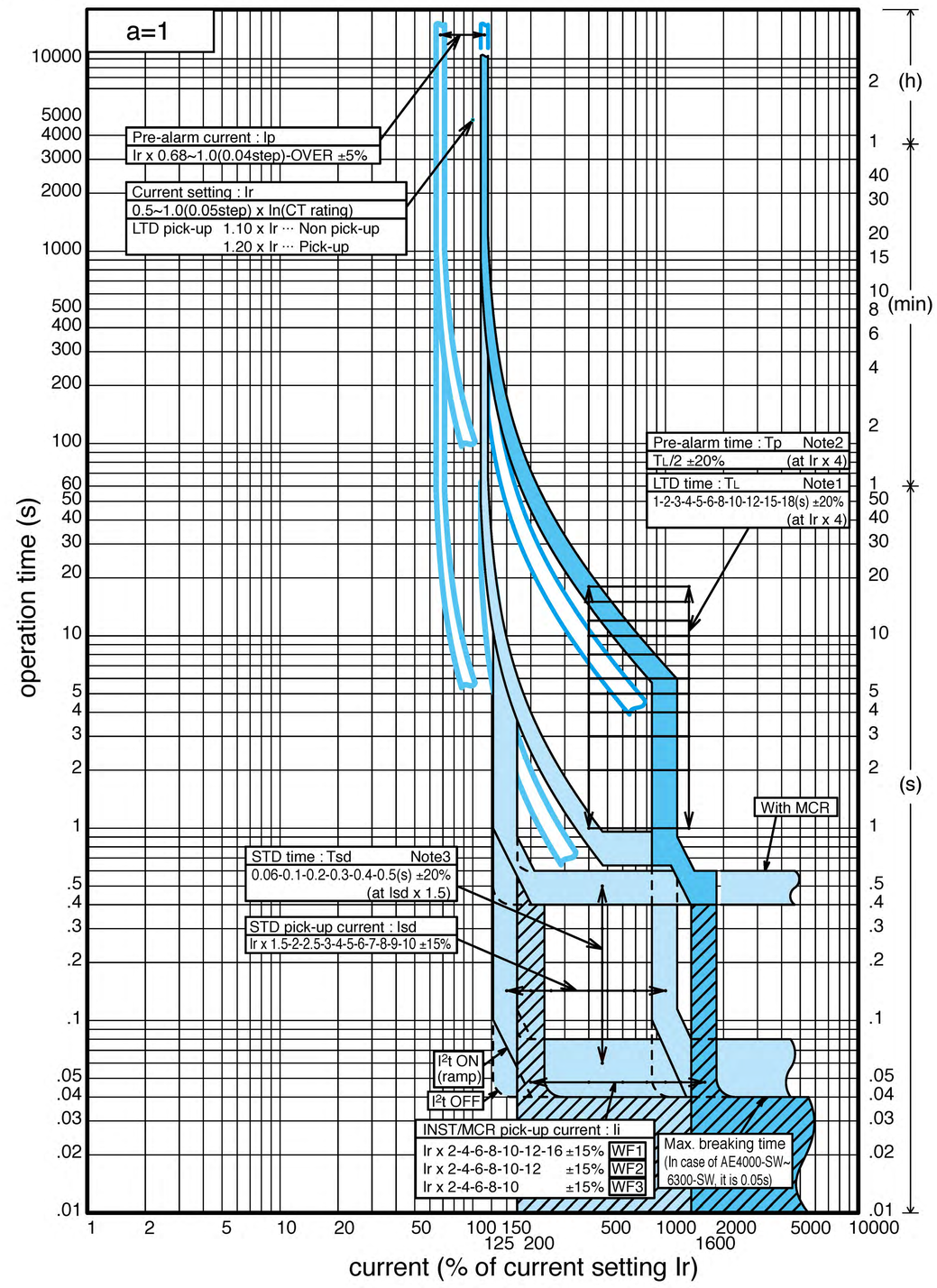


[LTD curve setting "a=3"]

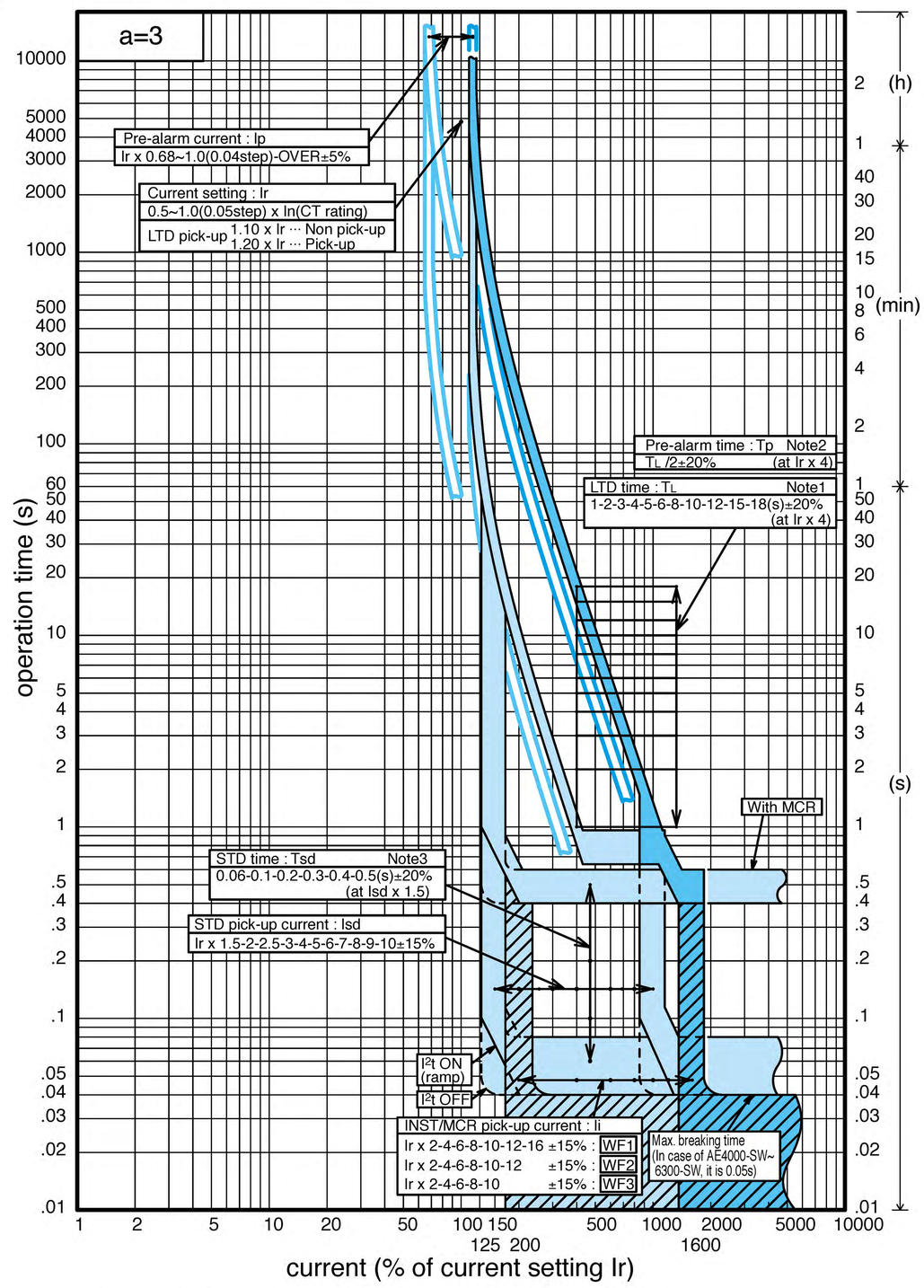


[LTD curve setting "a=4"]

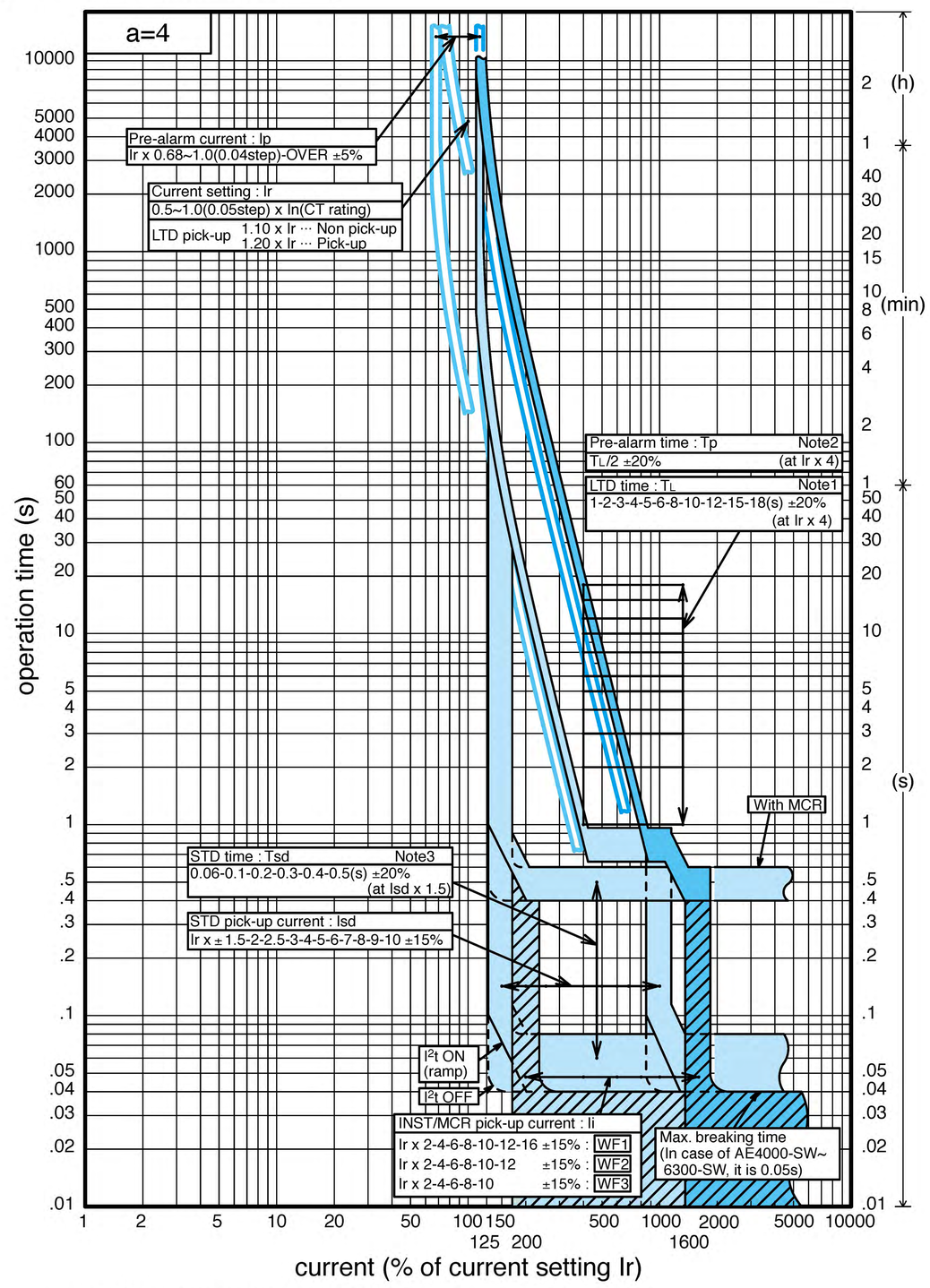


Note 1: LTD operating time $t_{LTD}$ is calculated by the following equations.

$$t_{LTD} = \frac{(4/1.1155)^a - 1}{(I/1.1155Ir)^a - 1} \times T_L \quad \left(\begin{array}{l} a = \text{LTD curve setting} \\ I = \text{load current (A)} \\ Ir = 0.5\sim1.0 \times In\ (A) \\ T_L = 1\sim18\ (s) \end{array}\right)$$

The accuracy of operating time is ±30% (1.5Ir≦load current<4Ir) or ±20% (4Ir≦load current).
LTD operating time is 0.8s(FLAT) when the operating time becomes 0.8s or less.

Note 2: PAL operating time $t_{PAL}$ is calculated by the following equations.

$$t_{PAL} = \frac{(4Ir/0.97Ip)^a - 1}{(I/0.97Ip)^a - 1} \times \frac{T_L}{2} \quad \left(\begin{array}{l} a = \text{LTD curve setting} \\ I = \text{load current (A)} \\ Ir = 0.5\sim1.0 \times In\ (A) \\ Ip = 0.68\sim1.15 \times Ir\ (A) \\ T_L = 1\sim18\ (s) \end{array}\right)$$

The accuracy of operating time is ±30% (1.5Ir≦load current<4Ir) or ±20% (4Ir≦load current).
PAL operating time is 0.5s(FLAT) when the operating time becomes 0.5s or less.

Note 3: When Tsd = "0.06" setting, operating time is 0.04~0.08s.
$I^2t$ is selectable : ON or OFF.

# Wiring diagram

● The following diagram shows the case that accessories are fully equipped.

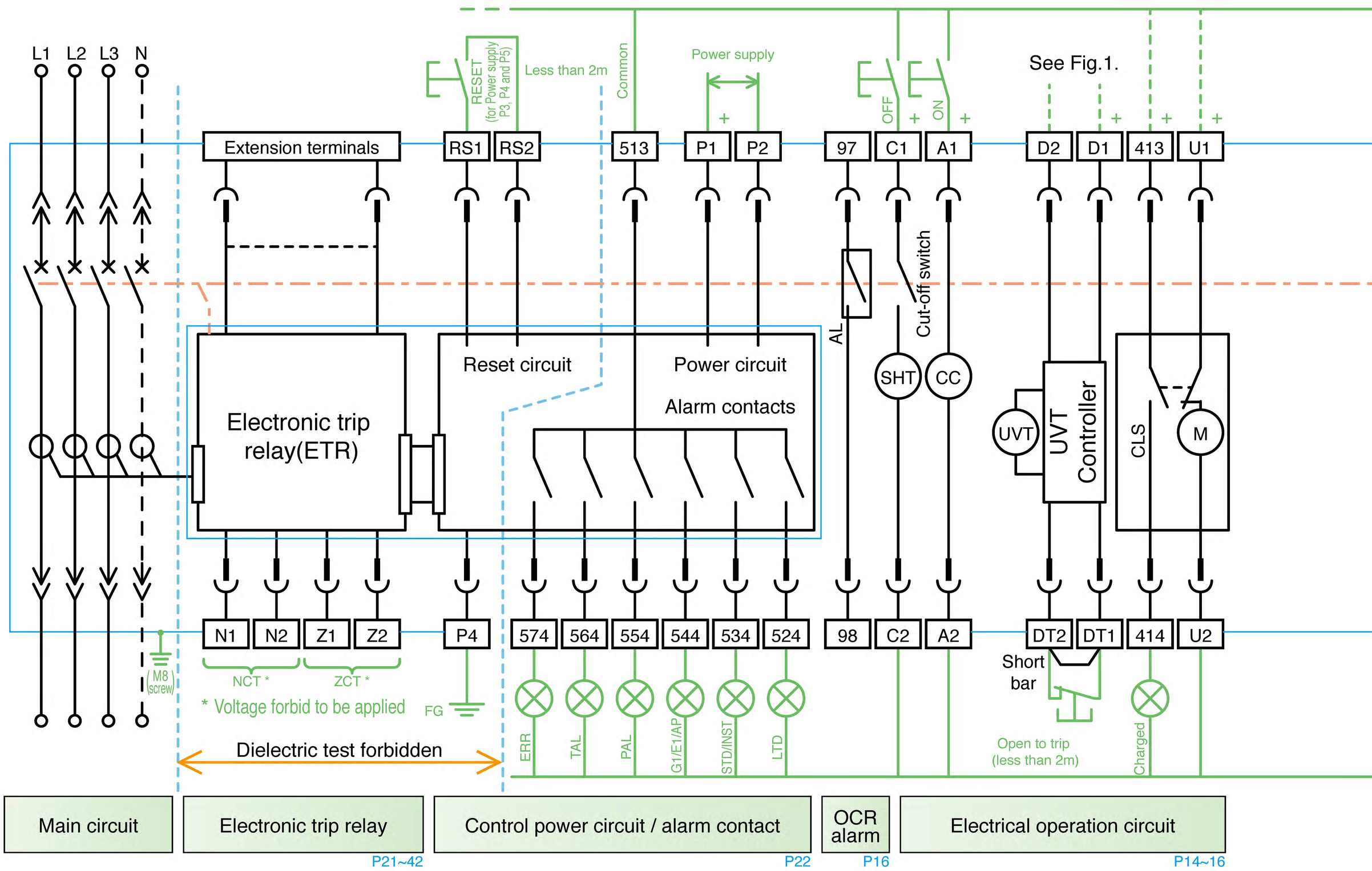


## Terminal description

| | |
|---|---|
| 13 14 ~ 53 54 | Auxiliary switch "a" |
| 11 12 ~ 51 52 | Auxiliary switch "b" |
| U1 U2 | Motor charging |
| 413 414 | Charged signal (Normal open) |
| D1 D2 | Voltage Input terminal of UVT |
| DT1 DT2 | Trip terminal of UVT (Remote trip) |
| A1 A2 | Closing coil |
| C1 C2 | Shunt trip |
| 97 98 | OCR alarm |
| P1 P2 | Power supply for ETR |
| P4 | FG of power supply (FG:Frame Ground) |
| RS1 RS2 | Alarm reset (Trip cause LED, alarm contact) |
| 513 524 | Alarm contact for LTD Trip |
| 513 534 | Alarm contact for STD or INST Trips |
| 513 544 | Alarm contact for Ground fault, Earth leakage trips or 2nd Pre-alarm contact |
| 513 554 | Pre-alarm contact |
| 513 564 | Temperature alarm contact |
| 513 574 | Error alarm contact |
| Z1 Z2 | For external ZCT |
| N1 N2 | For Neutral CT (Note) |
| Extension terminals | For external display DP2 |
| | For Interface unit |
| | For VT unit |

## Accessory Symbols

| | |
|---|---|
| SHT | Shunt tripping device |
| CC | Closing coil |
| M | Motor(Motor charging device) |
| UVT | UVT coil |
| AX | Auxiliary switch |
| AL | OCR alarm switch |
| CLS | Charge limit switch |
| SBC | Shorting b-contact |
| CL | Cell switch |

Internal wiring

External wiring (user's wiring)

Control circuit connecter (drawout type)

## Control circuit terminal block Terminal placement

| | | | | | | | | | | | | | | | | | | | | | | | | | |
|---|---|---|---|---|---|---|---|---|---|---|---|---|---|---|---|---|---|---|---|---|---|---|---|---|---|
| VT (VT unit) | N1 | Z1 | RS1 | 513 | 564 | 544 | 524 | P1 | 97 | C1 | A1 | DT1 | D1 | 413 | U1 | 51 | 41 | 31 | 21 | 11 | 53 | 43 | 33 | 23 | 13 |
| I/F-1 I/F-2 (Display Interface unit) | N2 | Z2 | RS2 | P4 | 574 | 554 | 534 | P2 | 98 | C2 | A2 | DT2 | D2 | 414 | U2 | 52 | 42 | 32 | 22 | 12 | 54 | 44 | 34 | 24 | 14 |

Extended terminal

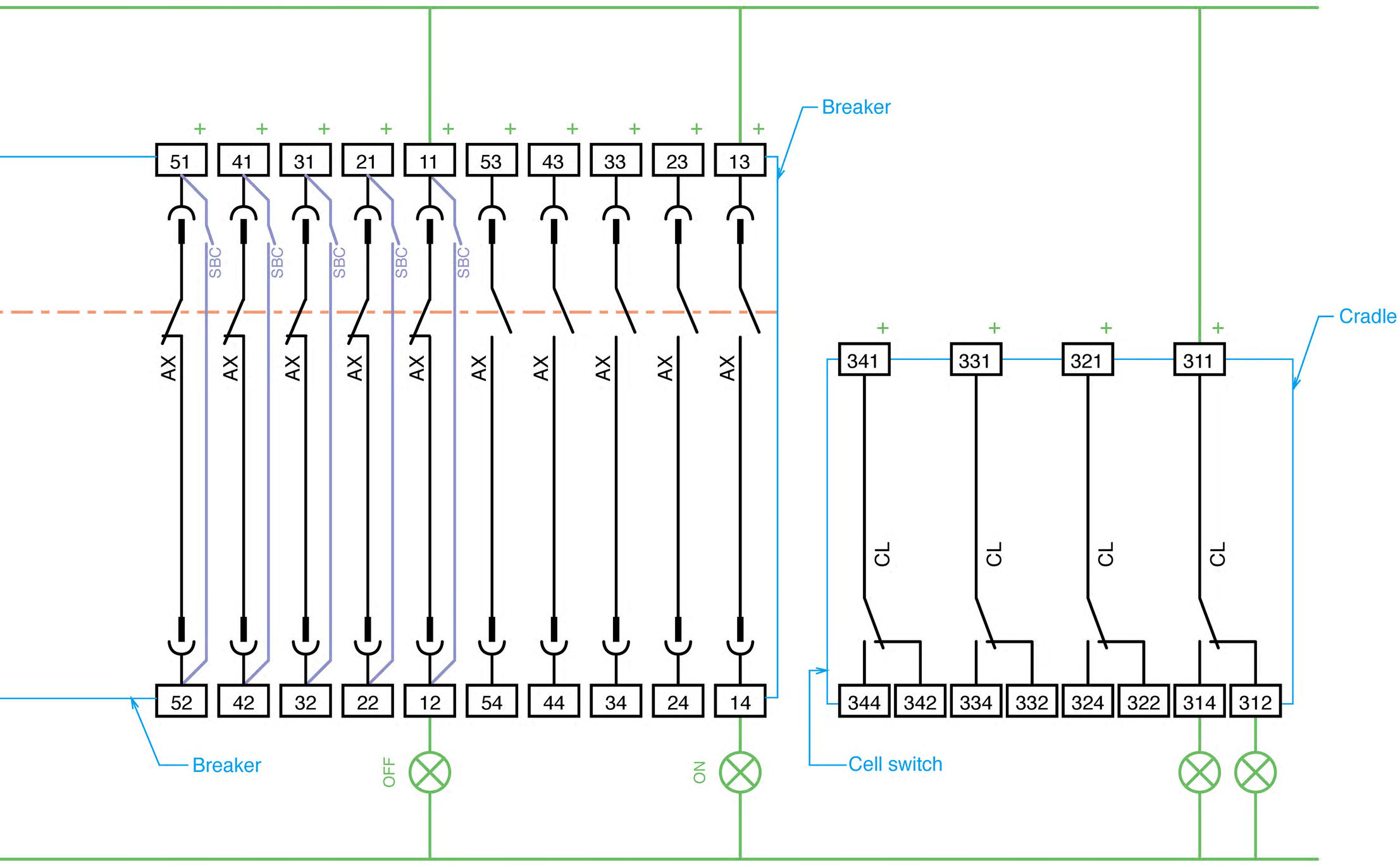


| Auxiliary switch(normal close) | Auxiliary switch(normal open) | Cell switch |
|---|---|---|
| P16 | P16 | P19 |

## Fig.1
## UVT controller wiring

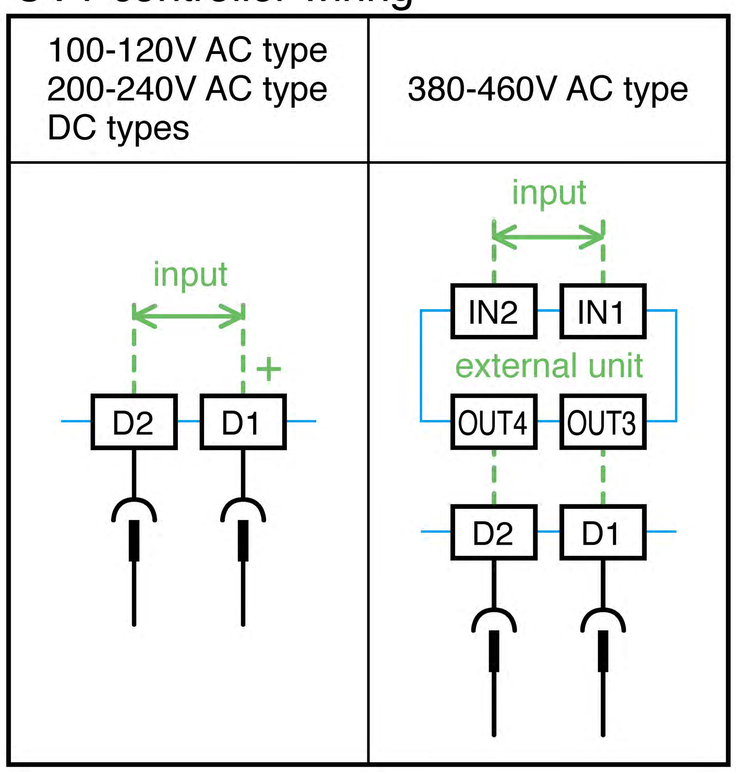


## Control circuit Recommended crimp-type terminals

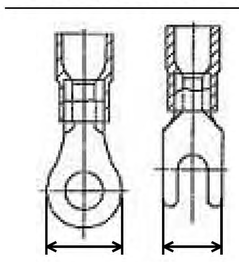

for M3.5 screw
(wire size 1.25mm²~2.0mm²)

Max. 7.2mm

Note;

- For the drawout type, the cables should have the length which allow the control circuit terminal block to be moved to the left or right by 5mm.
- When a coil load is connected in the same control circuit as the ETR, surge absorbers are required to absorb the surge voltage.
- OCR alarm (AL)
  The contact output of the OCR alarm (Standard type AL) is the one-pulse output and the output time is 30~50ms.
  For this reason, this output needs self-holding circuit.
- For Power supply type P3 and P4, the high sensitive relay used in contact output may cause the chattering noise (wrong output of 1ms level) during ON and OFF operation, depending on the Panel placing condition. When it is used in the quick responsive sequence, the filter circuit of a few milli-second (ms) should be provided or the double reading sampling should be implemented.
- Closing coil (CC)
  As CC is one-pulse driven, it is not necessary to insert AXb for burning prevention purposes. Inserting AXb will cause anti-pumping function to be ineffective.
- Under voltage trip device (UVT)
  Use the switch that can open and close 150V DC, 0.5A for remote trip.
  Remote trip terminal has short bar at shipment, so remove it before using this function.
  Disconnect the voltage input wires during dielectric testing of main circuit.
- Since some terminals are polarized, the wiring should be done correctly as the polarity shown in the wiring diagram when the control voltage is DC. Auxiliary switch (AX) Standard type has no polarity.
- Alarm reset (Terminal: RS1 and RS2) is available only for Power supply type P3, P4 and P5.
  For Power supply type P1 and P2, it can not be reset from the Control circuit terminal block (RS1 and RS2).
- Alarm contacts (Terminal : 513~574) are available only for power supply type P3, P4 and P5. For output contacts, refer to page 22 Note2.
- FG (Terminal: P4) is the protective earth for power supply (Terminal: P1, P2).
  It is recommended to use this terminal to reduce surge (M8 screw required).
- Shorting b-contact (SBC)
  SBC can be provided for all AX b contacts. At the time of shipment from factory, SBC is already connected to control circuit terminal block. Only one more crimp terminal can be added on contact, overlapping with SBC's contact on Terminal: 11~51.